Published: 11-May-2011

Engine System - General Information - EngineV6 4.0L Petrol

Diagnosis and Testing

Overview

Diagnosis of the different areas of the engine is covered in other specific sections of this workshop manual. This section is limited to an oil pressure test.

For a detailed description of the engine system and operation, refer to the relevant Description and Operation section of the workshop manual.

Inspection and Verification

1. **1.** Verify the customer concern.
2. **2.** Visually inspect for obvious signs of mechanical or electrical damage.
3. **3.** If an obvious cause for an observed or reported concern is found, correct the cause (if possible) before proceeding to the next step.

Engine Oil Pressure Test - 4.0L

• NOTE: Prior to checking the engine oil pressure, a road test of 6 miles (10 kilometres), must be carried out. Do not attempt to attain engine normal operating temperature by allowing the engine to idle.

1. **1.** Disconnect the battery ground cable.
2. • WARNINGS:

   The spilling of hot engine oil is unavoidable during this procedure, care must be taken to prevent scalding.

   Wear protective gloves.

   2. Remove the engine oil pressure sensor.
   REFER to: Engine Oil Pressure (EOP) Sensor (303-14C Electronic Engine Controls - V6 4.0L Petrol, Removal and Installation).
3. **3.** Install the special tool.
4. **4.** Install the special tool gauge and tighten the union.

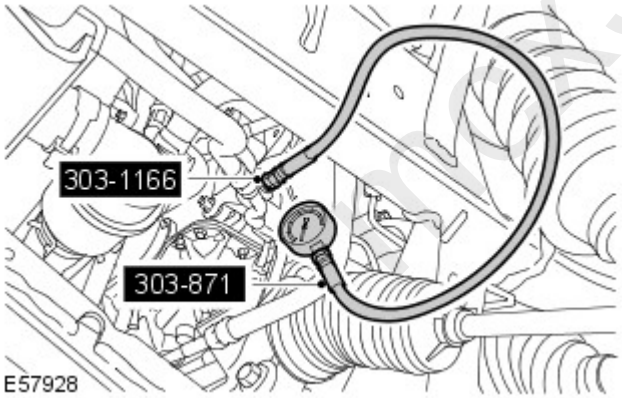

5. **5.** Check and top-up the engine oil if required.
6. **6.** Connect the battery ground cable.
7. **7.** Start and run the engine.
8. **8.** Note the oil pressure readings with the engine running at idle and 3500 RPM.
   REFER to: Specifications (303-01C Engine - V6 4.0L Petrol, Specifications).
9. **9.** Turn off the engine.
10. **10.** Disconnect the battery ground cable.
11. **11.** Remove the special tools.
    1. Clean the components.
12. **12.** Install the oil pressure sensor.
    REFER to: Engine Oil Pressure (EOP) Sensor (303-14C Electronic Engine Controls - V6 4.0L Petrol, Removal and Installation).
13. **13.** Check and top-up the engine oil if required.

14. **14.** Connect the battery ground cable.

mcx30.com

Published: 11-May-2011

Engine System - General Information - EngineTDV6 2.7L Diesel

Diagnosis and Testing

Overview

Diagnosis of the different areas of the engine is covered in other specific sections of this workshop manual. This section is limited to an oil pressure test.

For a detailed description of the engine system and operation, refer to the relevant Description and Operation section of the workshop manual.

Inspection and Verification

1. **1.** Verify the customer concern.
2. **2.** Visually inspect for obvious signs of mechanical damage.

Visual Inspection

Mechanical
• Engine oil level • Coolant level • Transmission fluid level • Fuel level • Coolant leaks • Oil leaks • Fuel leaks • Visibly damaged or worn parts • Loose or missing nuts or bolts • Fuel contamination/grade/quality • Sensor fitment/condition • Viscous fan and solenoid

3. **3.** If an obvious cause for an observed or reported concern is found, correct the cause (if possible) before proceeding to the next step.
4. **4.** Use the approved diagnostic system or a scan tool to retrieve any diagnostic trouble codes (DTCs) before carrying out the following procedure.
   - Make sure that all DTCs are cleared following rectification.

Oil Pressure check

• NOTE: Prior to checking the engine oil pressure, a road test of 6 miles (10 kilometers), must be carried out. Do not attempt to attain engine normal operating temperature by allowing the engine to idle.

1. • WARNINGS:

   The spilling of hot engine oil is unavoidable during this procedure, care must be taken to prevent scalding.

   Wear protective gloves.

   1. Remove the oil pressure sensor.
   REFER to: Engine Oil Pressure (EOP) Sensor (303-14A Electronic Engine Controls - TDV6 2.7L Diesel, Removal and Installation).
2. **2.** Install the special tool to the oil filter housing.
3. **3.** Install the special tool gauge and tighten the union.

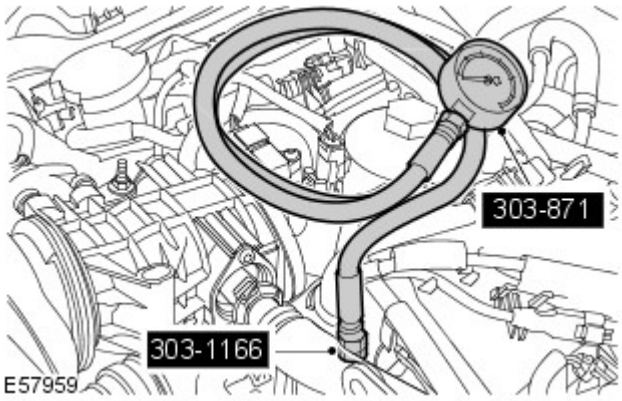

4. **4.** Check and top-up the engine oil, if required.

mcx30.com

5. **5.** Start and run the engine.
6. **6.** Note the oil pressure readings with the engine running at idle and 3500 RPM.
   REFER to: Specifications (303-01A Engine - TDV6 2.7L Diesel, Specifications).
7. **7.** Turn off the engine.
8. **8.** Remove the special tools.
9. **9.** Install the oil pressure sensor.
   REFER to: Engine Oil Pressure (EOP) Sensor (303-14A Electronic Engine Controls - TDV6 2.7L Diesel, Removal and Installation).
10. **10.** Check and top-up the engine oil, if required.

mcx30.com

Published: 11-May-2011

Engine System - General Information - EngineTDV6 3.0L Diesel

Diagnosis and Testing

Principle of Operation

For a detailed description of the 3.0L Diesel engine, refer to the relevant Description and Operation section in the workshop manual. REFER to: (303-01B Engine - TDV6 3.0L Diesel)

Engine (Description and Operation),
Engine (Description and Operation),
Engine (Description and Operation).

Inspection and Verification

1. **1.** Verify the customer concern.
2. **2.** Visually inspect for obvious signs of mechanical or electrical damage.

Visual Inspection

Mechanical	Electrical
○ Coolant level ○ Coolant leaks ○ Oil level ○ Oil leaks ○ Visibly damaged or worn parts ○ Loose or missing nuts or bolts	○ Wiring harness ○ Electrical connector(s) ○ Injectors ○ Glow plugs ○ 5 volt sensor supply ○ Sensor(s) ○ Cooling fan control module and motor ○ Engine Control Module (ECM)

2. If an obvious cause for an observed or reported concern is found, correct the cause (if possible) before proceeding to the next step.

3. **3.** If the concern is not visually evident, verify the symptom and refer to the relevant Symptom Chart. Symptom Charts have been separated into **Leaks** and **Noise Vibration and Harshness (NVH)** for ease of use. Alternatively, check for Diagnostic Trouble Codes (DTCs) and refer to the relevant DTC Index.

Symptom Charts

Symptom Chart, Leaks

Symptom	Possible Cause	Action
External coolant leaks	• Damaged hose(s) • Damaged expansion tank • Damaged radiator • Leaking seals/gaskets • Cracked/damaged casings	Check cooling system.
Internal coolant leaks Note: This may be indicated by the production of white smoke from the exhaust	• Leaking seals/gaskets • Cracked/damaged casings	Check cooling system.
Engine overheats	• Insufficient coolant • Insufficient oil • Pressure cap fault • Thermostat not opening • Coolant pump failure • Cooling fan failure	Check cooling system.
Engine takes too long to reach operating temperature	• Thermostat stuck open	Check cooling system.
External oil leaks	• Gaskets • Seals • Oil pipes • Oil filter • Oil cooler • Damaged/cracked casings • Crankcase ventilation system • Piston ring blow-by	Clean and confirm the area of the leak. Check the visual condition of oil carrying components. Check the crankcase ventilation system. Carry out a compression test, GO to Pinpoint Test A.
Internal oil leaks (leaks into coolant or combustion chamber) Note: This may be indicated by the production of blue smoke from the exhaust	• Gaskets • Seals • Damaged/cracked casings • Worn valve guides	Check for traces of oil in the coolant. Check for evidence of oil in the combustion chambers (deposits on the glow plugs, etc). Confirm oil consumption and vehicle usage with the owner/driver. Carry out an oil consumption test, GO to Pinpoint Test B.

Symptom	Possible Cause	Action
	• Worn cylinder bores/pistons • Broken piston rings	

Symptom Chart, NVH

• NOTE: As the checks suggested here are open to interpretation, they should be used as a guide only. Descriptions of noises, etc, are in general terms, so depend on a degree of experience on the part of the technician.

Symptom	Possible Cause	Action
Rattle/ticking from top of engine	• Valve gear noise • Camshaft bearing noise • Camshaft chain noise • Tensioner noise • Vacuum pump noise • High pressure fuel pump noise	Check the engine oil pressure, GO to Pinpoint Test C. . Check the function of the hydraulic tappets and the camshaft condition. Check the camshaft bearings, chains and tensioners. Check the vacuum pump, and high pressure fuel pump
Growl from top of engine	• High pressure fuel pump belt noise • High pressure fuel pump belt tensioner noise	Check the high pressure fuel pump belt and tensioner
Squeaking/Creaking/Squeal from front of engine	• Front End Accessory Drive (FEAD) belt • FEAD belt tensioner • Driven components on FEAD belt	Check the FEAD belt and driven components.
Whine/Slap/Growl from front of engine	• Front End Accessory Drive (FEAD) belt • FEAD belt tensioner • Driven components on FEAD belt • Timing belt noise • Timing belt tensioner noise	Check the FEAD belt and driven components. Check the timing belt and tensioners
Knock from lower half of engine (often worse with a cold engine)	• Piston slap • Piston pin noise • Connecting rod bearing noise	Check the engine oil pressure, GO to Pinpoint Test C. . Check piston, cylinder bore, piston pin and connecting rod bearing for excess wear
Knock/Rumble from lower half of engine (often worse on overrun)	• Main bearing noise	Check the engine oil pressure, GO to Pinpoint Test C. . Check connecting rod bearing for excess wear
Misfire/Rough running	• Engine management system • Fuel charging and controls • Exhaust gas recirculation (EGR) system • Burnt/sticking valves • Worn valve guides • Worn cylinder bores/pistons • Broken piston rings • Damaged/cracked casings	Check engine management and fuel charging and controls systems for failure. Check EGR system for failures. Carry out a compression test, GO to Pinpoint Test A. Check for excess wear in engine components

DTC Index

For a list of Diagnostic Trouble Codes (DTCs) that could be logged on this vehicle, please refer to Section 100-00.

Pinpoint Tests

• NOTE: Where reference is made to 'suitable equipment', this refers to standard workshop equipment. Refer to the operating instructions for your own equipment when performing any tests.

PINPOINT TEST A : CHECK THE CYLINDER COMPRESSIONS	
WARNING: Only compression testers able to read the higher compression pressures found in diesel engines should be used. Failure to follow this instruction may result in personal injury.	
• NOTE: Where possible, compression testing should be carried out on an engine at operating temperature.	
TEST CONDITIONS	**DETAILS/RESULTS/ACTIONS**
A1: CARRY OUT A DRY CYLINDER COMPRESSION TEST	
	1 Make sure the parking brake is applied and that the selector lever is in park.
	2 Set the ignition status to **OFF**.

	3 Remove the starter relay.
	4 Disconnect the starter motor solenoid connector.
	5 Connect a suitable remote starter device to the starter motor solenoid.
	6 Remove the glow plugs.
	7 Install adaptor 303-1131 in place of the glow plug in the first cylinder to be tested.
	8 Connect a suitable compression tester to the adaptor. See warning above.
	9 Using the remote starter device, crank the engine a minimum of five revolutions.
	10 Record the compression figure and the number of revolutions taken to reach it.
	11 Repeat steps 7 - 10 above for the remaining cylinders, cranking the engine for a similar number of revolutions each time.
	12 Compare the compression figures across all the cylinders.
	Are the compression figures within 10% of each other? **Yes** Unless the compression figures are universally very low (experience will indicate this), check for other causes for the customer complaint. **No** GO to A2.

A2: CARRY OUT A WET CYLINDER COMPRESSION TEST	
CAUTION: If engine oil is introduced into the cylinders, run the engine at 2,000 rpm for a minimum of ten minutes after completing testing to prevent damage to the catalytic converters. Failure to follow this instruction may result in damage to the vehicle.	
• NOTE: There is a combustion chamber in the top of each piston. Make sure that the oil is not allowed to run into this chamber.	
	1 Using a suitable oil can with a flexible spout, introduce a small amount of clean engine oil into the cylinder just before testing, such that the oil is able to run between the piston and the cylinder bore.
	2 Repeat steps 7 - 10 from the test above, introducing oil into each cylinder just before testing.
	3 Compare the compression figures across all the cylinders.
	Is the compression figure higher than the dry test? **Yes** A higher figure following the introduction of oil may indicate a worn or damaged cylinder bore, piston and/or piston rings. Disassembly would be required to confirm this. **No** If the compression figure is unaffected by the introduction of oil, but the figure is still less than 90% of the other cylinders, this may indicate a burnt and/or sticking valve, leaking head gasket, etc. Disassembly would be required to confirm this. Clear any DTCs which may have been induced by the test.

PINPOINT TEST B : OIL CONSUMPTION TEST

• NOTE: Oil consumption will vary, depending on a number of factors. New engines will normally use more oil than 'run-in' engines, although a guideline would be to expect 16,000 Km (10,000 miles) per liter.

TEST CONDITIONS	DETAILS/RESULTS/ACTIONS
B1: CHECK FOR EXCESSIVE OIL CONSUMPTION	
	1 Start the engine and allow it to run until it reaches normal operating temperature.
	2 Make sure the vehicle is parked on a level surface and set ignition status to **OFF**.
	3 Allow to settle for at least five minutes.
	4 Check the oil level.
	5 Correct the level, if necessary, and record the reading and mileage in the vehicle history.
	6 Make sure that the owner/driver is aware that a test is being carried out, and that they should not top-up their oil level for the duration of the test, but should check the level every 160-240 Km (100-150 miles).
	7 When the oil level reaches the **ADD** mark, the customer should bring the vehicle in to be checked.
	8 Top-up the oil to the level at the beginning of the test and record the amount of oil needed to do so, and the mileage covered in the course of the test.
	9 From this, the consumption can be calculated, and a decision made as to whether or not the consumption is considered excessive.
	Is the consumption excessive for the mileage and/or use? **Yes** Disassembly will be required to check the components indicated in the symptom chart. **No** No further action is required.

PINPOINT TEST C : CHECK THE ENGINE OIL PRESSURE

• NOTE: Check and, if necessary, top-up the engine oil level before beginning this test.

• NOTE: Where reference is made to 'suitable equipment', this refers to standard workshop equipment. Refer to the operating instructions for your own equipment when performing any tests.

TEST CONDITIONS	DETAILS/RESULTS/ACTIONS
C1: CHECK FOR LOW ENGINE OIL PRESSURE	
	1 Remove the oil pressure sensor.
	2 Connect a suitable oil pressure gauge in place of the oil pressure sensor.
	3 Start the engine and check for leaks at the gauge connection.
	4 Allow the engine to idle and monitor the oil pressure.
	5 Raise the engine speed to 2,500 rpm and monitor the oil pressure.

	Is the oil pressure less than 0.50 bar (7.25 psi) between idle and 2,500 rpm? **Yes** GO to C2. **No** GO to C3.
C2: CHECK FOR LOW ENGINE OIL PRESSURE AT ENGINE SPEEDS GREATER THAN 2,500 RPM	
	1 Raise the engine speed to above 2,500 rpm and monitor the oil pressure.
	Is the oil pressure less than 1.0 bar (14.5 psi) at engine speeds greater than 2,500 rpm? **Yes** Pressure this low may indicate a problem with: oil pump, filtering, clearances within the engine. Check if there are any other indications of engine faults (noise, etc), refer to the symptom chart above. **No** GO to C3.
C3: CHECK FOR HIGH ENGINE OIL PRESSURE	
	1 Monitor the engine oil pressure at varying engine speeds.
	Does the oil pressure reach 4.0 bar (58 psi)? **Yes** Pressure this high may indicate a blockage in the lubrication system. If this is not resolved, high oil pressure will lead to engine oil leaks and other failures. **No** If the oil pressure stays in the band between 0.50 bar (7.25 psi) and 1.0 bar (14.5 psi) this would be considered normal.

mcx30.com

Published: 11-May-2011

Engine System - General Information - EngineV8 5.0L Petrol

Diagnosis and Testing

Special Tool(s)	
303-1451 E136285	Oil pressure testing adaptor, 303-1451
303-871 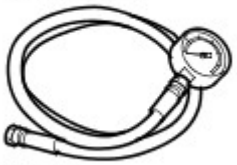 E57919	Oil pressure testing gauge, 303-871

Principle of Operation

For a detailed description of the 5.0L engine, refer to the relevant Description and Operation sections in the workshop manual. REFER to: Engine (303-01D Engine - V8 5.0L Petrol, Description and Operation).

Inspection and Verification

1. **1.** Verify the customer concern.
2. **2.** Visually inspect for obvious signs of damage and system integrity.

Visual Inspection

Mechanical	Electrical
○ Coolant leaks ○ Oil leaks ○ Leaks in the fuel system ○ Visibly damaged or worn parts ○ Loose or missing fixings	○ Fuses ○ Loose or corroded electrical connectors ○ Harnesses ○ Sensors

3. **3.** If an obvious cause for an observed or reported concern is found, correct the cause (if possible) before proceeding to the next step.
4. **4.** If the concern is not visually evident, verify the symptom and refer to the Symptom Chart, alternatively check for Diagnostic Trouble Codes (DTCs) and refer to the relevant DTC Index.

Symptom Chart

• NOTE: If an engine is suspect, and the vehicle remains under the Manufacturers warranty refer to the Warranty Policy and Procedure manual (section B1.2), or determine if any prior approval programme is in operation, prior to the installation of a new engine.

• NOTE: Due to the possibility of loose carbon, that has become trapped between the valve face and seat, effecting the pressure readings, when carrying out a compression test and some cylinders are found to have low pressures, install the spark plugs, road test the vehicle and re-test the suspect cylinders. If the correct pressures are restored, no further action is required.

Symptom	Action
All engine related issues	• Check ECM for Diagnostic Trouble Codes (DTCs) and refer to DTC Index.
Difficult to start hot and cold	• Carry out general engine checks: - Compression test. Refer to component tests in this section. - Valve clearances - Spark plug condition and color
Poor idle	• Ensure the air intake system is free from leaks • Carry out general engine checks: - Compression test. Refer to component tests in this section. - Valve clearances - Spark plug condition and color • Check for collapsed catalytic converter/blocked exhaust system • Check long and short term fuel trim datalogger signals - Readings up to 10%: may be considered as acceptable if the readings are equal bank to bank - Positive readings of between 10-20%: check for air leaks in air intake system - Negative readings of between 10-20%: check for over fuelling e.g. leaking

mcxs0.com

Symptom	Action
	injectors, high fuel pressure - Readings above 20%: check for DTCs and refer to DTC Index. • Carry out a vacuum gauge check. Refer to component tests in this section
Insufficient power/Insufficient compression	• Ensure the air intake system is free from leaks • Carry out general engine checks: - Compression test. Refer to component tests in this section. - Valve clearances - Spark plug condition and color • Check for collapsed catalytic converter/blocked exhaust system • Check long and short term fuel trim datalogger signals - Readings up to 10%: may be considered as acceptable if the readings are equal bank to bank - Positive readings of between 10-20%: check for air leaks in air intake system - Negative readings of between 10-20%: check for over fuelling e.g. leaking injectors, high fuel pressure - Readings above 20%: check for DTCs and refer to DTC Index. • Carry out a vacuum gauge check. Refer to component tests in this section
Oil consumption	• Carry out oil leak check followed by an oil consumption test. Refer to the component tests in this section • If oil consumption is excessive: • Check the integrity of the engine breather system • Carry out general engine checks: - Compression test. Refer to component tests in this section. - Valve clearances - Spark plug condition and color
Noise	• Refer to the Special Service Messages on the Electronic Product Quality Report (EPQR) system for sound files. If the symptom does NOT compare to any of the sound files, contact Dealer Technical Support (DTS)

DTC Index

For a list of Diagnostic Trouble Codes (DTCs) that could be logged on this vehicle, please refer to Section 100-00.
REFER to: Diagnostic Trouble Code (DTC) Index - V8 5.0L Petrol, DTC: Engine Control Module (PCM) (100-00 General Information, Description and Operation).

Component Tests

Engine Oil Leaks

• NOTE: Before installing new gaskets or oil seals, make sure that the fault is clearly established.

If the oil leak cannot be identified clearly by a visual inspection, carry out an Ultraviolet test:

Fluorescent Oil Additive Method

1. **1.** Clean the engine with a suitable cleaning fluid (brake cleaner).
2. **2.** Drain the engine oil and refill with recommended oil, premixed with Diesel Engine Oil Dye or equivalent. Use a minimum 14.8 ml (0.5 ounce) to a maximum 29.6 ml (1 ounce) of fluorescent additive to all engines. If oil is not premixed, fluorescent additive must first be added to the crankcase.
3. **3.** Run engine for 15 minutes. Stop the engine and inspect all seal and gasket areas for leaks using a 12 Volt Master UV Diagnostic Inspection Kit or equivalent. A clear bright yellow or orange area will identify leak. For extremely small leaks, several hours may be required for the leak to appear.
4. **4.** As necessary, pressurize the main oil gallery system to locate leaks due to incorrectly sealed, loose or cocked plugs. If the flywheel bolts leak oil, look for sealer on the threads.
5. **5.** Repair all leaks as necessary.

Compression Test

General Remarks

• NOTE: Removing fuses and disconnecting electrical components may cause the Engine Control Module (ECM) to log Diagnostic Trouble Codes (DTCs). After the measurements have been carried out, DTCs should be cleared from memory by connecting to the Manufacturer Approved Diagnostic System.

• NOTE: Only check the compression pressure with the valves set to the prescribed clearance (if this can be adjusted).

The compression pressure should be checked with the engine at normal operating temperature.

Check the Compression Pressure

WARNING: Move gear selector lever to 'P' position. Failure to follow this instruction may result in personal injury.

1. **1.** Remove the fuel pump relay.

mcx30.com

2. **2.** Start the engine - the engine will start, run for a few seconds then stall.
3. **3.** Remove the spark plugs.
4. **4.** Install the compression tester.
5. **5.** Install an auxiliary starter switch in the starting circuit. With the ignition switch OFF, using the auxiliary starter switch, crank the engine a minimum of five compression strokes and record the highest reading. Note the approximate number of compression strokes required to obtain the highest reading.
6. **6.** Repeat the test on each cylinder, cranking the engine approximately the same number of compression strokes.
7. **7.** Install the removed components in reverse order, observing the specified tightening torques.
8. **8.** Clear all DTCs from the ECM.

Interpretation of the Results

• NOTE: Due to the possibility of loose carbon that has become trapped between the valve face and seat effecting the pressure readings, when carrying out a compression test and cylinders are found to have low pressures, install the spark plugs, road test the vehicle and re-test the suspect cylinders. If the correct pressures are restored, no further action is required.

The indicated compression pressures are considered within specification if the lowest reading cylinder is within 75% of the highest reading.

If the cylinder pressures are found to be low, carry out a leakdown test to determine the location of the fault (if any leakback can be heard through the engine breather system suspect the piston rings, if any leakback can be heard through the inlet system suspect the inlet valve or seat, if any leakback can be heard through the exhaust manifold suspect the exhaust valve or seat. If the measurements for two cylinders next to each other are both too low then it is very likely that the cylinder head gasket between them is burnt through. This can also be recognized by traces of engine oil in the coolant and/or coolant in the engine oil).

Oil Consumption Test

The amount of oil an engine uses will vary with the way the vehicle is driven in addition to normal engine-to-engine variation. This is especially true during the first 16,100 km (10,000 miles) when a new engine is being broken in or until certain internal components become conditioned. Vehicles used in heavy-duty operation may use more oil. The following are examples of heavy-duty operation:

- Trailer towing applications
- Severe loading applications
- Sustained high speed operation

Engines need oil to lubricate the following internal components:

- Cylinder block cylinder walls
- Pistons and piston rings
- Intake and exhaust valve stems
- Intake and exhaust valve guides
- All internal engine components

When the pistons move downward, a thin film of oil is left on the cylinder walls. As the vehicle is operated, some oil is also drawn into the combustion chambers past the intake and exhaust valve stem seals and burned.

The following are examples of conditions that can affect oil consumption rates:

- Engine size
- Operator driving habits
- Ambient temperatures
- Quality and viscosity of oil
- Engine is being run in an overfilled condition (check the oil level at least five minutes after a hot shutdown with the vehicle parked on a level surface. The oil level should not be above the top of the cross-hatched area and the letter "F" in FULL).

Operation under varying conditions can frequently be misleading. A vehicle that has been run for several thousand miles on short trips or in below-freezing ambient temperatures may have consumed a "normal" amount of oil. However, when checking the engine oil level, it may measure up to the full mark on the oil level indicator due to dilution (condensation and fuel) in the engine crankcase. The vehicle then might be driven at high speeds on the highway where the condensation and fuel boil off. The next time the engine oil is checked it may appear that a liter of oil was used in about 160 km (100 miles). Oil consumption rate is about one liter per 2,400 km (1,500 miles).

Make sure the selected engine oil meets Jaguar specification and the recommended API performance category "SG" and SAE viscosity grade as shown in the vehicle Owner's Guide. It is also important that the engine oil is changed at the intervals specified for the typical operating conditions.

The following diagnostic procedure is used to determine the source of excessive oil consumption.

• NOTE: Oil use is normally greater during the first 16,100 km (10,000 miles) of service. As mileage increases, oil use decreases. High speed driving, towing, high ambient temperature and other factors may result in greater oil use.

1. **1.** Define excessive consumption, such as the number of miles driven per liter of oil used. Also determine customers driving habits, such as sustained high speed operation, towing, extended idle and other considerations.
2. **2.** Verify that the engine has no external oil leaks as described under Engine Oil Leaks in this section.
3. **3.** Carry out an oil consumption test:

mcx30.com

- Run the engine to normal operating temperature. Switch engine OFF and allow oil to drain back for at least five minutes .
- With vehicle parked on level surface, check the engine oil level.
- If required, add engine oil to set level exactly to the FULL mark.
- Record the vehicle mileage.
- Instruct the customer to return for a level check after driving the vehicle as usual for 1,610 km (1000 miles).
- Check the oil level under the same conditions and at the same location as the initial check.

• NOTE: If the oil consumption rate is unacceptable go to Step 4.

4. **4.** Check the Positive Crankcase Ventilation (PCV) system. Make sure the system is not plugged.
5. **5.** Check for plugged oil drain-back holes in the cylinder head and cylinder block.
6. **6.** If the condition still exists after carrying out the above tests go to step 9.
7. **7.** Carry out a cylinder compression test. Refer to the Compression Test procedure in this section. This can help determine the source of oil consumption such as valves, piston rings or other areas.
8. **8.** Check valve guides for excessive guide clearance. Install new valve stem seals after verifying valve guide clearance.
9. **9.** Worn or damaged internal engine components can cause excessive oil consumption. Small deposits of oil on the tips of the spark plugs can be a clue to internal oil consumption.

Intake Manifold Vacuum Test

Bring the engine to normal operating temperature. Connect a vacuum gauge or equivalent to the intake manifold. Run the engine at the specified idle speed.

The vacuum gauge should read between 51-74 kPa (15-22 in-Hg) depending upon the engine condition and the altitude at which the test is performed. Subtract 4.0193 kPa (1 in-Hg) from the specified reading for every 304.8 m (1,000 feet) of elevation above sea level.

The reading should be steady. As necessary, adjust the gauge damper control (where used) if the needle is fluttering rapidly. Adjust damper until needle moves easily without excessive flutter.

Interpreting Vacuum Gauge Readings

A careful study of the vacuum gauge reading while the engine is idling will help pinpoint trouble areas. Always conduct other appropriate tests before arriving at a final diagnostic decision. Vacuum gauge readings, although helpful, must be interpreted carefully.

Most vacuum gauges have a normal band indicated on the gauge face.

The following are potential gauge readings. Some are normal; others should be investigated further.

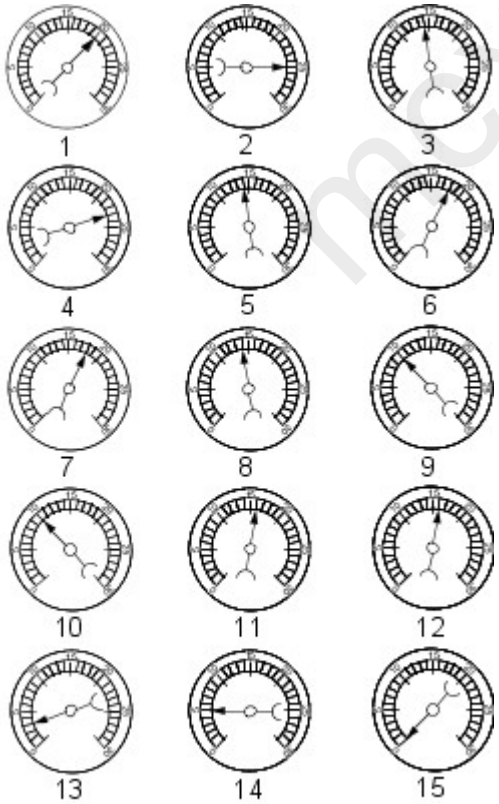

VUJ0001694

1. **1.** NORMAL READING: Needle between 51-74 kPa (15-22 in-Hg) and holding steady.
2. **2.** NORMAL READING DURING RAPID ACCELERATION: When the engine is rapidly accelerated, the needle will drop

mex30.com

to a low (not to zero) reading. When the throttle is suddenly released, the needle will snap back up to a higher than normal figure.

3. **3.** NORMAL FOR HIGH-LIFT CAMSHAFT WITH LARGE OVERLAP: The needle will register as low as 51 kPa (15 in-Hg) but will be relatively steady. Some oscillation is normal.
4. **4.** WORN RINGS OR DILUTED OIL: When the engine is accelerated, the needle drops to 0 kPa (0 in-Hg). Upon deceleration, the needle runs slightly above 74 kPa (22 in-Hg).
5. **5.** STICKING VALVES: When the needle remains steady at a normal vacuum but occasionally flicks (sharp, fast movement) down and back about 13 kPa (4 in-Hg), one or more valves may be sticking.
6. **6.** BURNED OR BENT VALVES: A regular, evenly-spaced, downscale flicking of the needle indicates one or more burned or damaged valves. Insufficient hydraulic valve tappet or hydraulic lash adjuster clearance will also cause this reaction.
7. **7.** POOR VALVE SEATING: A small but regular downscale flicking can mean one or more valves are not seating correctly.
8. **8.** WORN VALVE GUIDES: When the needle oscillates over about a 13 kPa (4 in-Hg) range at idle speed, the valve guides could be worn. As engine speed increases, the needle will become steady if guides are responsible.
9. **9.** WEAK VALVE SPRINGS: When the needle oscillation becomes more violent as engine RPM is increased, weak valve springs are indicated. The reading at idle could be relatively steady.
10. **10.** LATE VALVE TIMING: A steady but low reading could be caused by late valve timing.
11. **11.** IGNITION TIMING RETARDED: Retarded ignition timing will produce a steady but somewhat low reading.
12. **12.** INSUFFICIENT SPARK PLUG GAP: When spark plugs are gapped too close, a regular, small pulsation of the needle can occur.
13. **13.** INTAKE LEAK: A low, steady reading can be caused by an intake manifold or throttle body gasket leak.
14. **14.** BLOWN HEAD GASKET: A regular drop of fair magnitude can be caused by a blown head gasket or warped cylinder head to cylinder block surface.
15. **15.** RESTRICTED EXHAUST SYSTEM: When the engine is first started and is idled, the reading may be normal, but as the engine RPM is increased, the back pressure caused by a clogged muffler, kinked tail pipe or other concerns will cause the needle to slowly drop to 0 kPa (0 in-Hg). The needle then may slowly rise. Excessive exhaust clogging will cause the needle to drop to a low point even if the engine is only idling.

When vacuum leaks are indicated, search out and correct the cause. Excess air leaking into the system will upset the fuel mixture and cause concerns such as rough idle, missing on acceleration or burned valves. If the leak exists in an accessory such as the power brake booster, the unit will not function correctly. Always repair vacuum leaks.

Engine Oil Pressure Check

• NOTE: Prior to checking the engine oil pressure, a road test of 6 miles (10 kilometres), must be carried out. Do not attempt to attain engine normal operating temperature by allowing the engine to idle.

1. **1.** Disconnect the battery ground cable. Refer to section 414-00 - Charging System - General Information of the workshop manual
2. • WARNINGS:

   The spilling of hot engine oil is unavoidable during this procedure, care must be taken to prevent scalding.

   Wear protective gloves.

   2. Remove the engine oil filter element
   REFER to: Oil Filter Element (303-01D Engine - V8 5.0L Petrol, Removal and Installation).

• NOTE: Ensure the oil filter element is not contaminated during this procedure

3. **3.** Install the oil filter element into special tool (Oil filter adapter number 303-1451)
4. **4.** Install the special tool (Oil filter adapter number 303-1451) to the engine. Torque: 25 Nm
5. **5.** Install the special tool (Oil pressure testing gauge, 303-871) and tighten the union
6. **6.** Connect the battery ground cable
7. **7.** Refer to owner hand book, check and top-up the engine oil if required
8. **8.** Start and run the engine
9. **9.** Note the oil pressure readings with the engine running at idle and 3500 RPM
10. **10.** Turn off the engine
11. **11.** Disconnect the battery ground cable
12. **12.** Remove the special tools

    1. Clean the components

13. **13.** Install the engine oil filter element
    REFER to: Oil Filter Element (303-01D Engine - V8 5.0L Petrol, Removal and Installation).

- NOTE: Ensure the oil filter element is not contaminated during this procedure

14. **14.** Connect the battery ground cable

15. **15.** Refer to owner hand book, check and top-up the engine oil if required

mcx30.com

Published: 11-May-2011

Engine System - General Information - Bearing Inspection

General Procedures

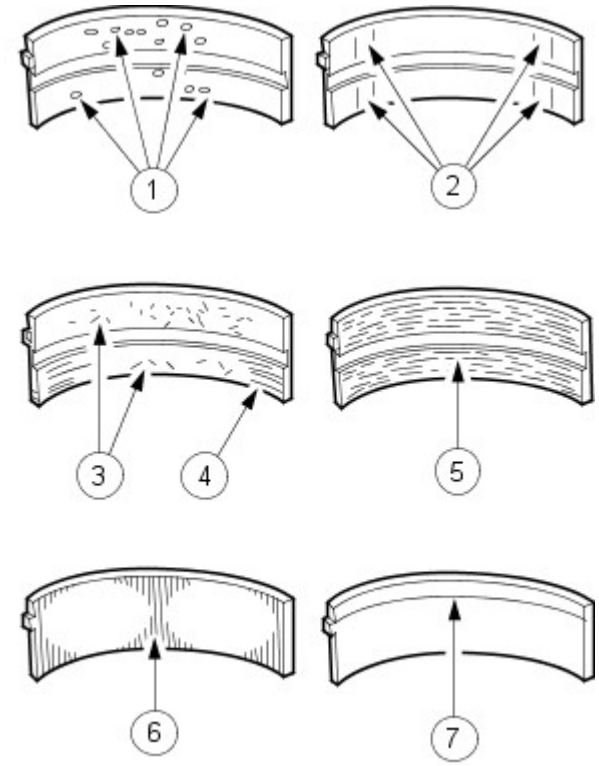

VUJ0002219

1. Inspect bearings for the following defects.

1. Cratering - fatigue failure
2. Spot polishing - incorrect seating.
3. Imbedded dirt engine oil.
4. Scratching - dirty engine oil.
5. Base exposed - poor lubrication.
6. Both edges worn - journal damaged.
7. One edge worn - journal tapered or bearing not seated.

mcx30.com

Published: 11-May-2011

Engine System - General Information - Camshaft Bearing Journal Clearance

General Procedures

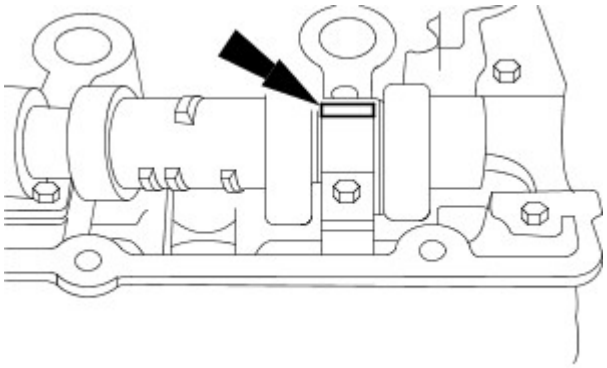

VUJ0001696

1. NOTE: Make sure that the following stages are followed exactly. The tappets or followers must be removed to carry out this measurement.

• NOTE: Make sure that the camshaft is to specification.

• NOTE: The bearing caps and journals should be free from engine oil and dirt.

Position on a length of plastigage on the bearing cap.

- Insert the camshaft, without lubrication, into the cylinder head.
- Position a plastigage strip, which should be equal to the width of the bearing cap, on the bearing journal.

2. Install the camshaft bearing caps.

- Follow the relevant tightening sequence.

3. NOTE: Do not strike the bearing caps.

Remove the camshaft bearing caps.

- Follow the relevant loosening sequence.

4. Using the special tool, read off the measurement.

- Compare the width of plastigage with the plastigage scale.
- The value that is read off is the bearing clearance.
- If the values are not to specification install a new camshaft.

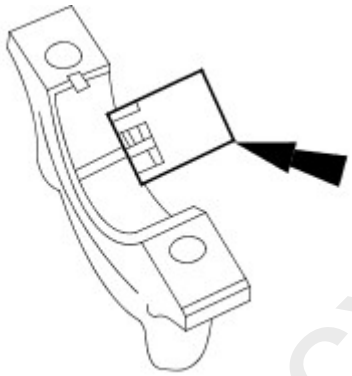

VUJ0001697

mcx30.com

Published: 11-May-2011

Engine System - General Information - Camshaft Bearing Journal Diameter

General Procedures

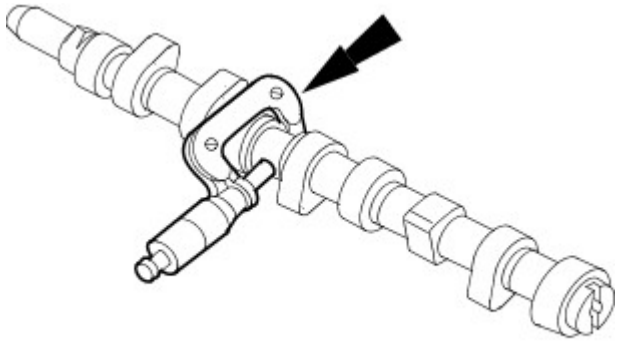

VUJ0001695

1. Determine the diameter of the camshaft journals.

- Using a micrometer measure the diameter at 90 degrees intervals to determine if the journals are out-of-round.
- Measure at two different points on the journal to determine if there is any tapering.
- If the measurements are out of the specified range, install a new camshaft.

mcx30.com

Published: 11-May-2011

Engine System - General Information - Camshaft End Play

General Procedures

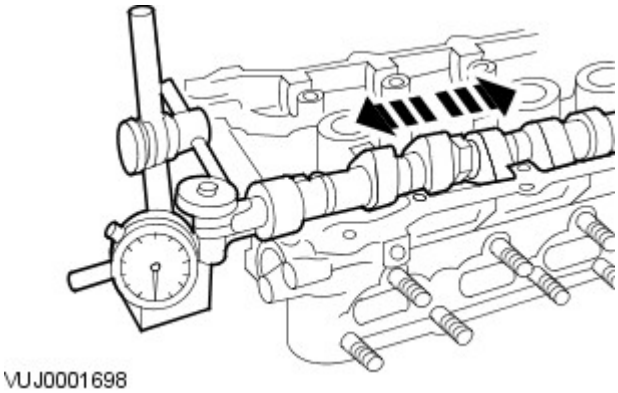

1. NOTE: Make sure that the camshaft is to specification.

Using the special tool, measure the end play.

- Slide the camshaft in both directions. Read and note the maximum and minimum values on the dial indicator gauge.
  1. End play = maximum value minus minimum value.
- If the measurement is out of specification, install new components.

mcx30.com

Published: 11-May-2011

Engine System - General Information - Camshaft Lobe Lift

General Procedures

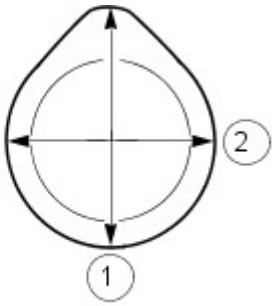

VUJ0001699

1. Measure the diameter (1) and diameter (2) with a vernier caliper. The difference in measurements is the lobe lift.

mcx30.com

Published: 11-May-2011

Engine System - General Information - Camshaft Surface Inspection

General Procedures

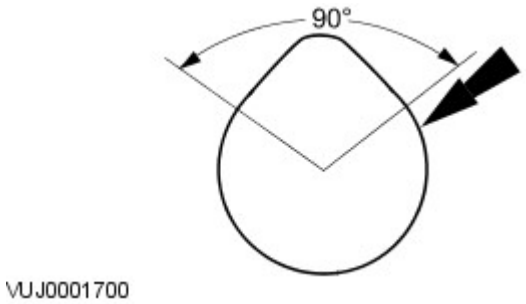

1. Inspect camshaft lobes for pitting or damage in the active area. Minor pitting is acceptable outside the active area.

mcx30.com

Published: 11-May-2011

Engine System - General Information - Connecting Rod Cleaning

General Procedures

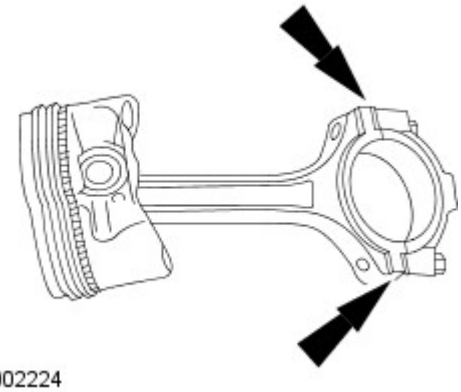

VUJ0002224

1. CAUTION: Do not use a caustic cleaning solution or damage to connecting rods may occur.

Mark and separate the parts and clean with solvent. Clean the oil passages.

mcx30.com

Engine System - General Information - Connecting Rod Large End Bore

General Procedures

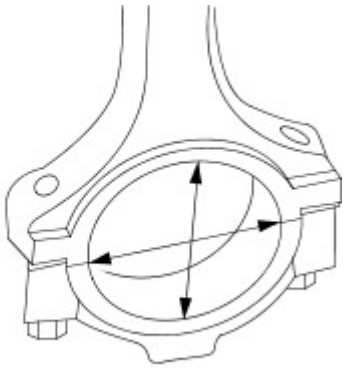

VUJ0002223

1. Measure the bearing bore in two directions. The difference is the connecting rod bore out-of-round. Verify the out-of-round is within specification.

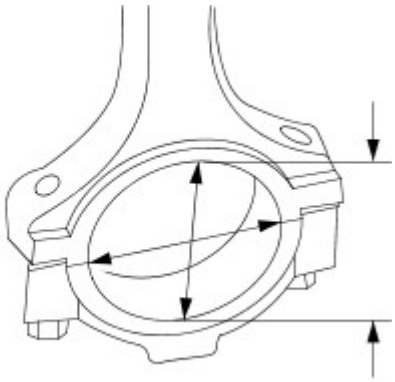

VUJ0002222

2. Measure the bearing bore diameter in two directions. Verify the bearing bore is within specification.

mcx30.com

Published: 11-May-2011

Engine System - General Information - Crankshaft End Play

General Procedures

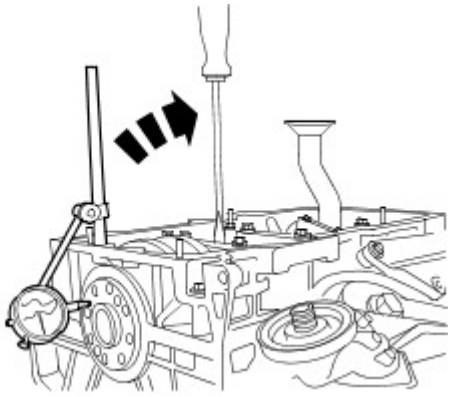

VUJ0002235

1. Using the Dial Indicator Gauge with Brackets, measure the end play.
   - Measure the end play by lifting the crankshaft using a lever.
   - If the value is out of the specification, install new thrust half rings to take up the end float and repeat the measurement.

mcx30.com

Published: 11-May-2011

Engine System - General Information - Crankshaft Main Bearing Journal Clearance

General Procedures

CAUTION: **THESES PROCEDURES SHOULD NOT BE CARRIED OUT DURING THE MANUFACTURERS WARRANTY PERIOD.**

1. NOTE: **Example - *PJEAL* - Crankshaft Main Journal Diameter.**

Read the grade letters from LEFT to RIGHT = FRONT to REAR of engine eg. for this example engine, the crank journal at the front of the engine is grade P, and at the rear is grade L.

- The selection of main bearing shells is described in the following chart.

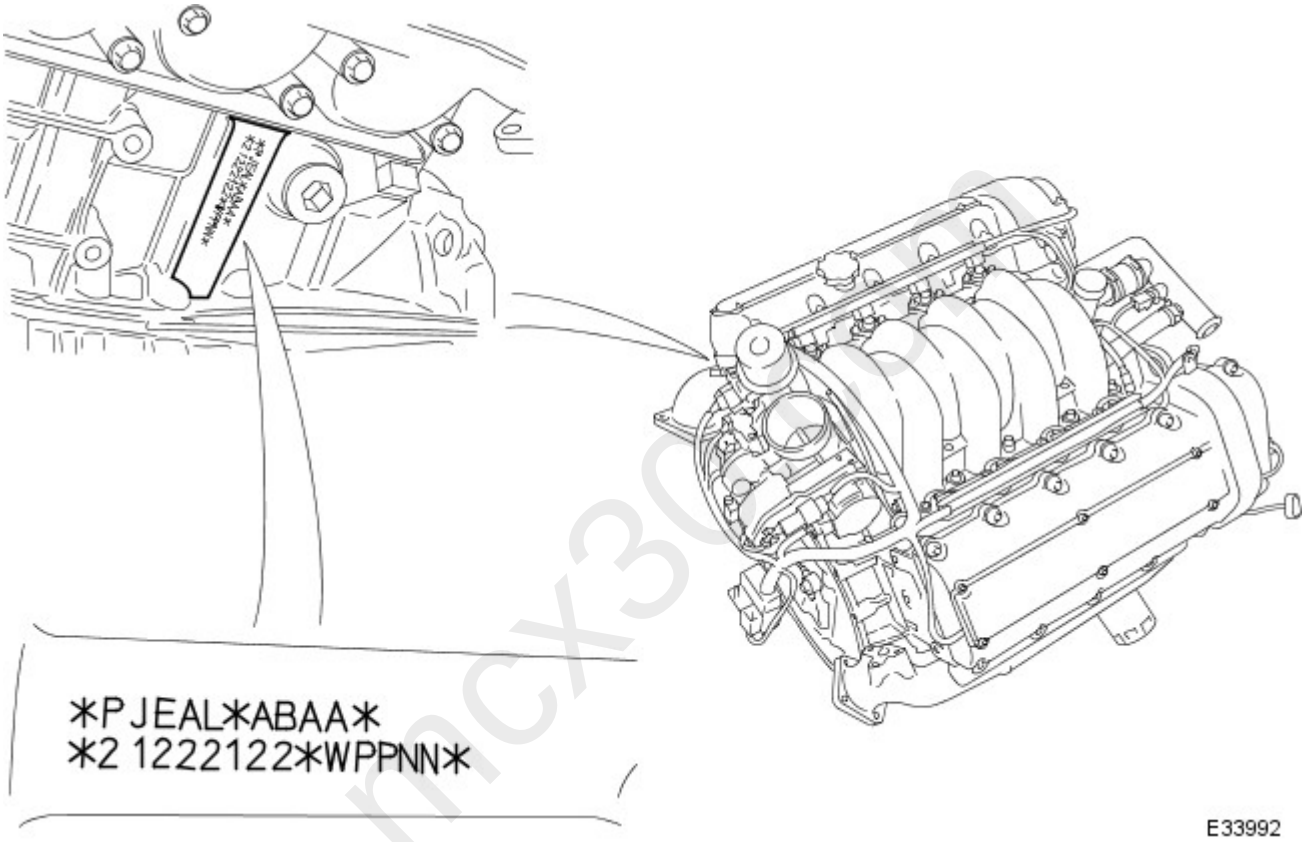

2. NOTE: **Example - *ABAA* - Crankshaft (Big End Bearing) Crankpin Diameter**

• NOTE: **For vehicles built up to 2002 MY.**

• NOTE: **If the crankshaft main bearing carrier retaining bolts have been marked with a center punch dot, they must be discarded and new bolts installed.**

Read the grade letters from LEFT to RIGHT = FRONT to REAR of engine eg. for this example engine, the crankpin at the front of the engine is grade A and at the rear is also grade A.

- Grade A = 56,000 to 55,994 mm (Bearing Shell Color Code - Blue).
- Grade B = 55,994 to 55,988 mm (Bearing Shell Color Code - Green).
- Grade C = 55,988 to 55,982 mm (Bearing Shell Color Code - Yellow).

3. NOTE: **Example - *ABAA* - Crankshaft (Big End Bearing) Crankpin Diameter**

• NOTE: **For vehicles built from 2002 MY.**

• NOTE: **If the crankshaft main bearing carrier retaining bolts have been marked with a center punch dot, they must be discarded and new bolts installed.**

Read the grade letters from LEFT to RIGHT = FRONT to REAR of engine eg. for this example engine, the crankpin at the front of the engine is grade A and at the rear is also grade A.

- Grade A = 53,000 to 52,994 mm (Bearing Shell Color Code - Blue).
- Grade B = 52,994 to 52,988 mm (Bearing Shell Color Code - Green).
- Grade C = 52,988 to 52,982 mm (Bearing Shell Color Code - Yellow).

4. NOTE: **Example - *21222122* - Cylinder Bore and Piston**

The cylinder bore grades read from LEFT to RIGHT as follows:

- Bank 2 - Cylinder 1, Bank 2 - Cylinder 2, Bank 2 - Cylinder 3, Bank 2 - Cylinder 4, Bank 1 - Cylinder 4,
- Bank 1 - Cylinder 3, Bank 1 - Cylinder 2, Bank 1 - Cylinder 1.
- **(Note, in earlier publications Bank 1 was described as A-Bank and Bank 2 as B-Bank)**
- Grade 1 Bore = 85,990 to 86,000 mm.
- Grade 2 Bore = 86,000 to 86,010 mm.
- Grade 3 Bore = 86,010 to 86,020 mm.

5. NOTE: **Example - *WPPNN* - Crankshaft Main Bearing Bore in Cylinder Block**

Read the grade letters from LEFT to RIGHT = FRONT to REAR of engine eg. for this example engine, the crank journal bore at the front of the engine is grade W, and at the rear is grade N.

- The selection of main bearing shells is described in the following **JOURNAL DIAMETER AND MAIN BEARING BORE CHART**.

6. JOURNAL DIAMETER AND MAIN BEARING BORE CHART

mcx30.com

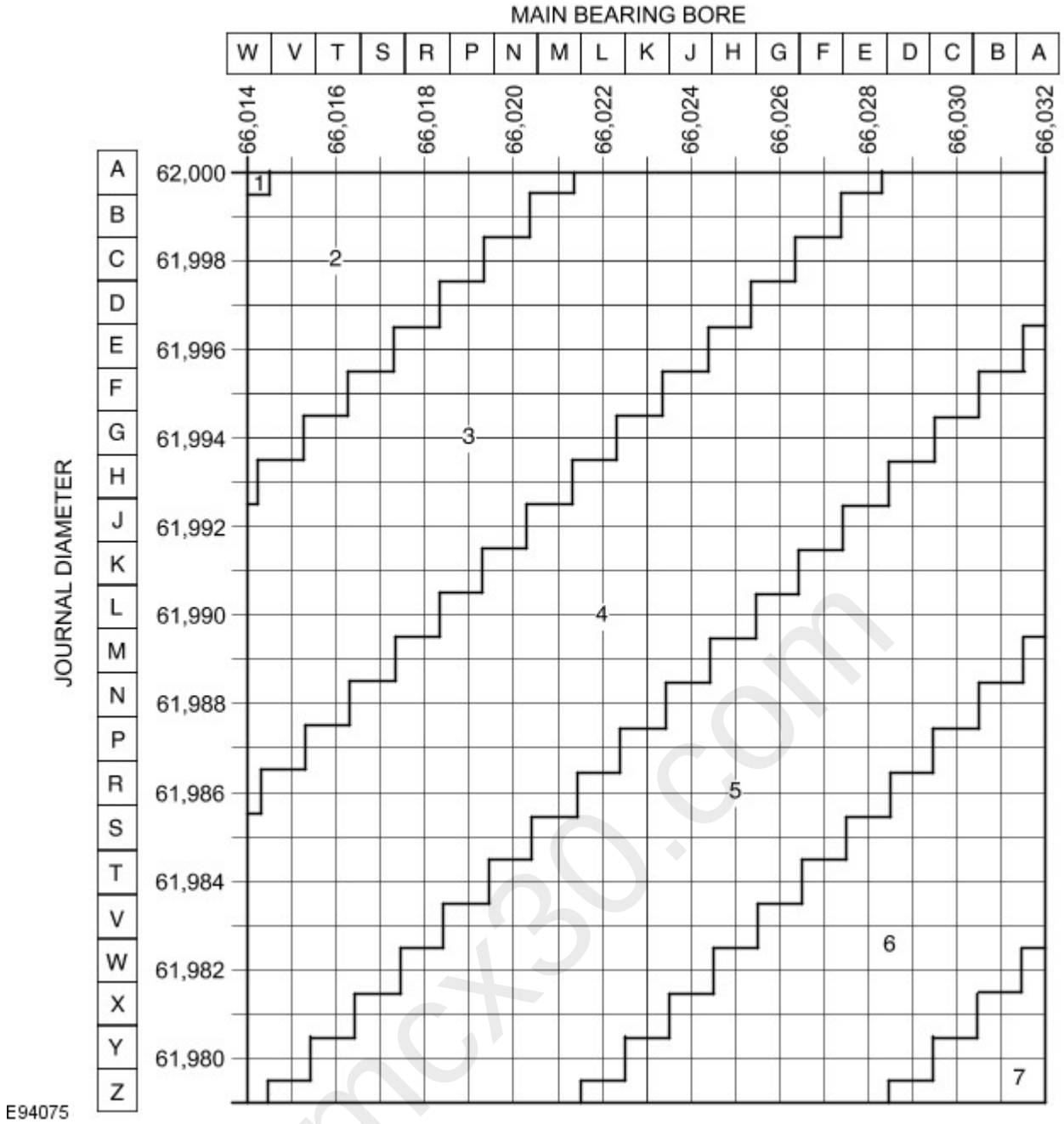

mcx30.com

7. NOTE: **THIS PROCEDURE SHOULD ONLY BE CARRIED OUT WHEN REPLACIING MAIN BEARING SHELLS.**

• NOTE: Refer to the **JOURNAL DIAMETER AND MAIN BEARING BORE CHART** in step 6 for tolerance and bearing information.

The number in each diagonal band represents a PAIR of color coded main bearing shells which must be used with a specific journal, depending on the combination of journal diameter and crankshaft bore diameter. The color codes for each band are as follows:

1. **Blue / Green and Blue / Green**
2. **Blue / Green and Blue**
3. **Blue and Blue**
4. **Blue and Green**
5. **Green and Green**
6. **Green and Yellow**
7. **Yellow and Yellow**

- Consider crankshaft journal 5 (from the example grade markings on the cylinder block) - the cylinder block bore is Grade N and the crankshaft journal diameter is Grade L.

From the chart, it will be seen that the point of intersection is in Band 4 which equates to one Blue shell and one Green shell.

- When the appropriate pair of color codes have been selected for a journal, either color may be installed to the cylinder block or to the bedplate, but, the shell which is to be installed to the cylinder block must have an oil groove and the shell which is to be installed to the bedplate must be plain.

8. NOTE: **THIS PROCEDURE SHOULD ONLY BE CARRIED OUT WHEN A REPLACMENT CRANKSHAFT OR CYLINDER BLOCK HAS BEEN FITTED.**

• NOTE: Refer to the **JOURNAL DIAMETER AND MAIN BEARING BORE CHART** in step 6 for tolerance and bearing information.

The thickness grade of all main bearing shells are to be selected to give a total running clearance of not less than 0.022 mm or greater than 0.040 mm.

- Each bearing bore in the block/bedplate assembly should be measured at two mutually perpendicular diameters 45° to the vertical in the middle of the bearing.
- The minimum diameter of the two is to be used.
- Each crankshaft main bearing journal should be measured dynamically at a point in line with the middle of each bearing.
- When the appropriate pair of color codes have been selected for a journal, either color may be installed to the cylinder block or to the bedplate, but, the shell which is to be installed to the cylinder block must have an oil groove and the shell which is to be installed to the bedplate must be plain.

mcx30.com

Published: 11-May-2011

Engine System - General Information - Cylinder Bore Out-of-Round

General Procedures

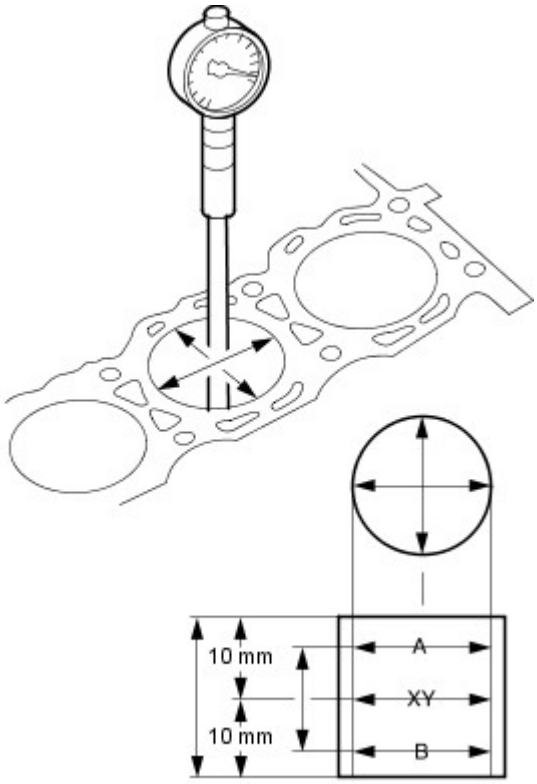

VUJ0002234

1. NOTE: The main bearing caps or lower crankcase must be in place and tightened to the specified torque; however, the bearing shells should not be installed.

Measure the cylinder bore with an internal micrometer.

- Carry out the measurements in different directions and at different heights to determine if there is any out-of-roundness or tapering.
- If the measurement is out of the specified range, hone out the cylinder block or install a new block.

mcx30.com

Published: 11-May-2011

Engine System - General Information - Cylinder Head Distortion

General Procedures

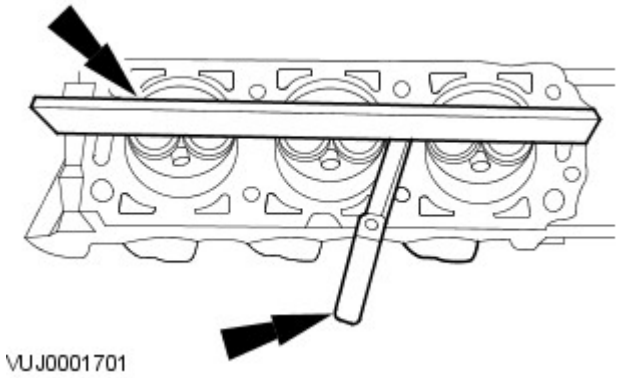

1. Measure the cylinder block/cylinder head distortion.

- Using the special tool, measure the mating face distortion.
- If the value is not to specification rework the mating face.

mcx30.com

Published: 11-May-2011

Engine System - General Information - Exhaust Manifold Cleaning and Inspection

General Procedures

1. Inspect the cylinder head joining flanges of the exhaust manifold for evidence of exhaust gas leaks.
2. Inspect the exhaust manifold for cracks, damaged gasket surfaces, or other damage that would make it unfit for further use.

mcx30.com

Published: 11-May-2011

Engine System - General Information - Piston Inspection

General Procedures

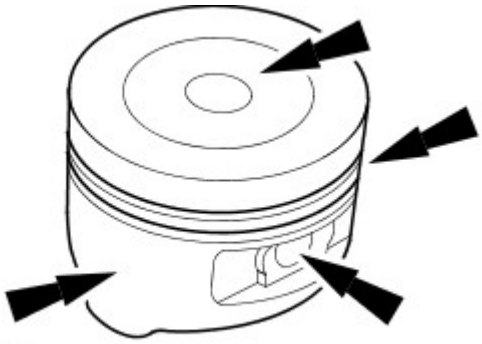

VUJ0002233

1. CAUTION: Do not use any aggressive cleaning fluid or a wire brush to clean the piston.

Carry out a visual inspection.

- Clean the piston skirt, pin bush, ring grooves and crown and check for wear or cracks.
- If there are signs of wear on the piston skirt, check whether the connecting rod is twisted or bent.

mcx30.com

Published: 11-May-2011

Engine System - General Information - Piston Pin Diameter

General Procedures

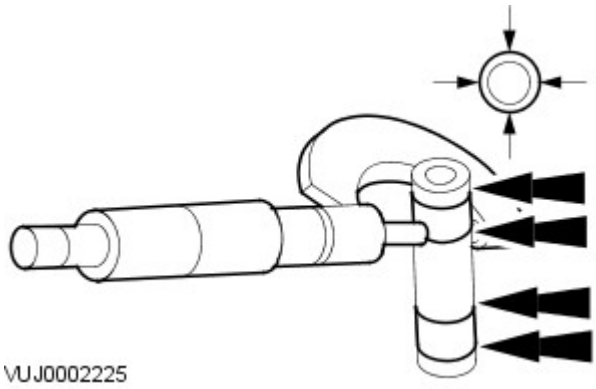

1. NOTE: The piston and piston pin are a matched pair. Do not mix up the components.

Measure the piston pin diameter.

- Measure the diameter in two directions.
- If the values are not to specification, install a new piston and a new piston pin.

mcx30.com

Published: 11-May-2011

Engine System - General Information - Piston Pin to Bore Diameter

General Procedures

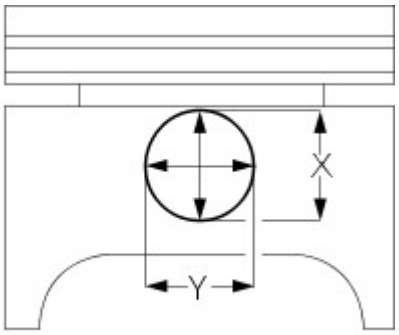

VUJ0002232

1. NOTE: The piston and piston pin form a matched pair. Do not mix up the components.

Measure the diameter of the piston pin bore.

- Measure the diameter in two directions.
- If the values are not to specification, install both a new piston and a new piston pin.

mcx30.com

Published: 11-May-2011

Engine System - General Information - Piston Ring End Gap

General Procedures

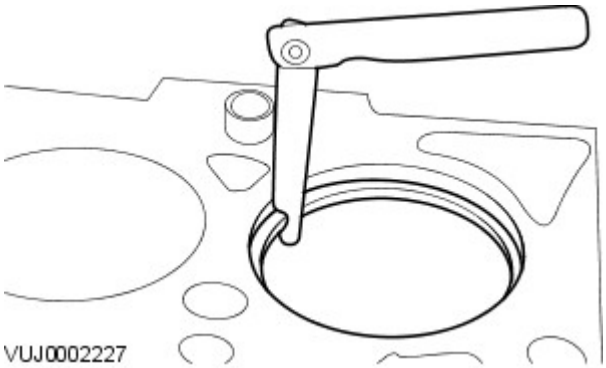

1. CAUTION: Do not mix up the piston rings. Install the piston rings in the same position and location.

Using the Feeler Gauge, measure the piston ring gap.

- The values given in the specification refer to a gauge ring used during production.

mcx30.com

Published: 11-May-2011

Engine System - General Information - Piston Ring-to-Groove Clearance

General Procedures

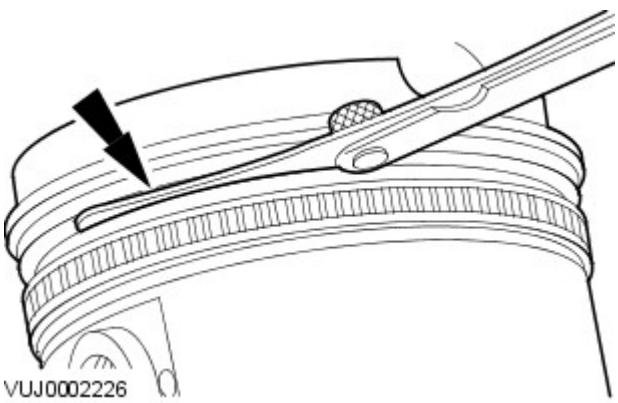

1. NOTE: The piston ring must protrude from the piston groove. To determine the piston ring clearance, insert the Feeler Gauge right to the back of the groove, behind the wear ridge.

Using the Feeler Gauge, measure the piston ring clearance.

mcx30.com

Published: 11-May-2011

Engine System - General Information - Valve Spring Free Length

General Procedures

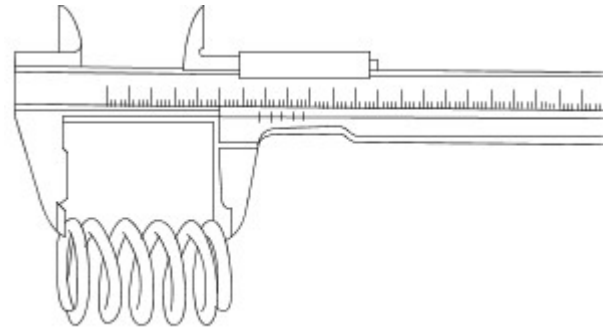

VUJ0002221

1. Using a vernier gauge, measure the free length of each valve spring. Verify the length is within specification.

mcx30.com

Published: 11-May-2011

Engine System - General Information - Valve Stem Diameter

General Procedures

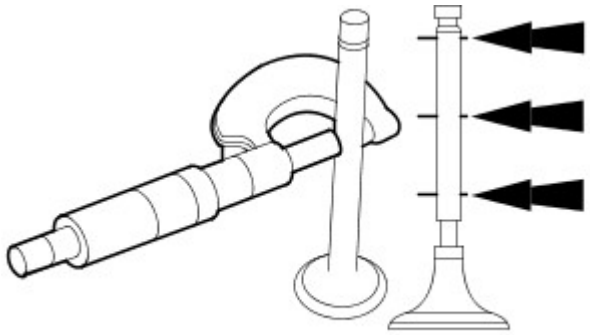

VUJ0002220

1. Using a micrometer measure the diameter of the valve stems.

- If the measurements are not to specification, install a new valve.

mcx30.com

Published: 02-Jun-2011

Engine System - General Information - Leakage Test Using Smoke Test Equipment

General Procedures

CAUTION: The compressed air line supply pressure must be between 3.5 and 12 bar (50 and 175 psi) for the smoke test equipment to function correctly. Do not exceed this pressure. Failure to follow this instruction may result in damage to the smoke test equipment.

- NOTE: The vehicle battery must be in good condition and fully charged before carrying out this procedure.
- NOTE: On vehicles with 3.0L TDV6, it will be necessary to insert smoke at both air cleaner outlet pipes independently if the right hand turbocharger and associated hoses are to be tested.
- NOTE: In some cases it may be necessary to remove undertrays, trim or engine covers to obtain access to all potential leak locations.
- NOTE: Some variation in the illustrations may occur, but the essential information is always correct.
- NOTE: For further information regarding operation of the test equipment refer to the manufacturers operators manual supplied with the kit.

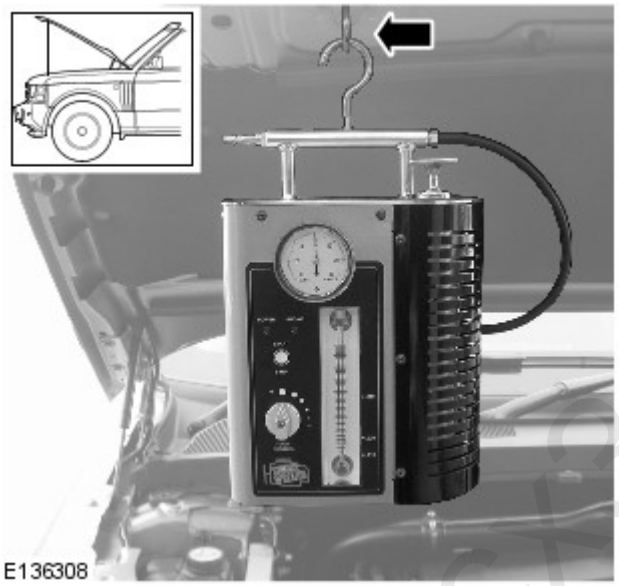

1. WARNING: Use an additional support to prevent the hood from falling if the smoke test equipment is secured to the hood. Failure to follow this instruction may result in personal injury.

Install the smoke test equipment to a suitable location under the hood.

2. Connect a suitable compressed air line to the smoke test equipment.

3. Connect the smoke test equipment positive power cable to the battery positive terminal.

4. WARNING: Do not connect the smoke test equipment negative cable to the battery negative terminal.

Connect the smoke test equipment negative cable to a suitable body ground point.

mcx30.com

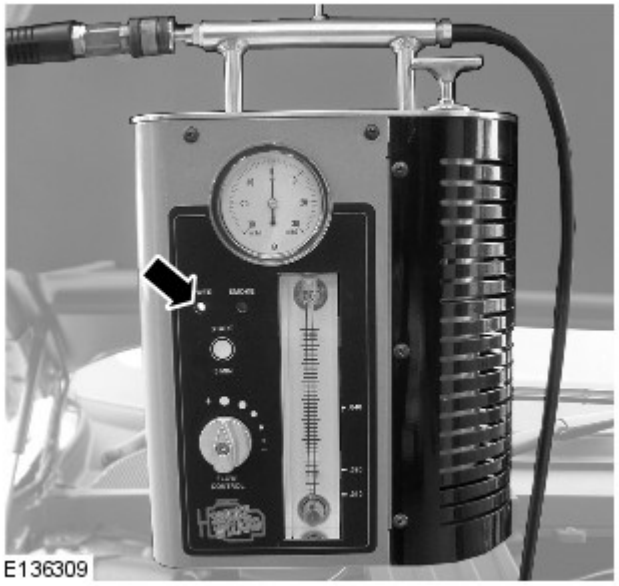

5. NOTE: A flashing green light indicates low battery voltage. In this case, place the battery on charge and make sure that the battery is fully charged before using the smoke test equipment.

Observe the power indicator lamp on the smoke test equipment. Make sure that a continuous green light is displayed.

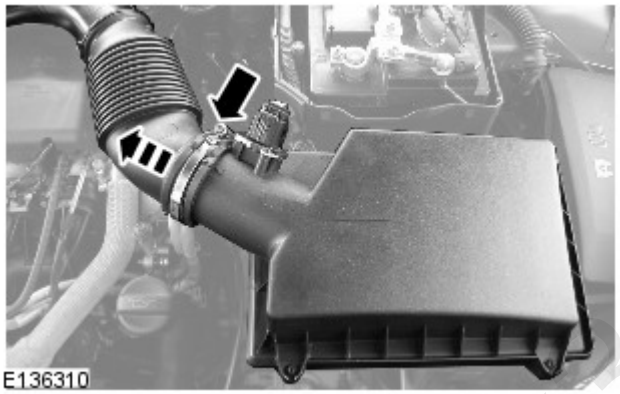

6. NOTE: In some cases it may be necessary to remove the air cleaner(s) to allow access to the air cleaner outlet pipes.

• NOTE: In some cases it will be necessary to cap one of the air cleaner outlet pipes. Use the blanking caps supplied in the kit to cap the open orifice.

Disconnect the air cleaner outlet pipe(s).

mcx30.com

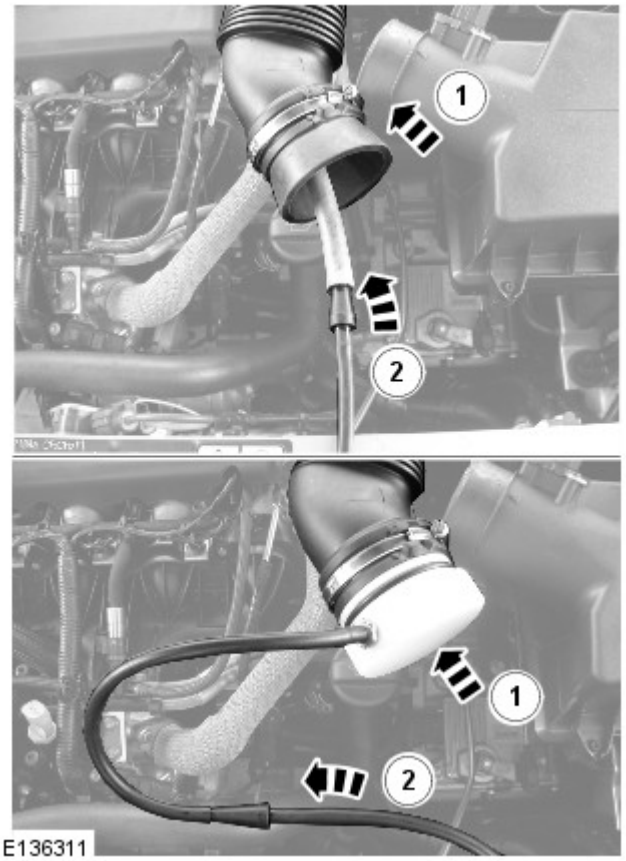

7. NOTE: Make sure the smoke test equipment adapter is a good fit to the air cleaner outlet pipe. This must be an air tight seal.

Connect the smoke test equipment supply hose to the air cleaner outlet pipe.

1. Install the appropriate adapter to the air cleaner outlet pipe.
2. Connect the smoke test equipment supply hose to the adapter link hose.

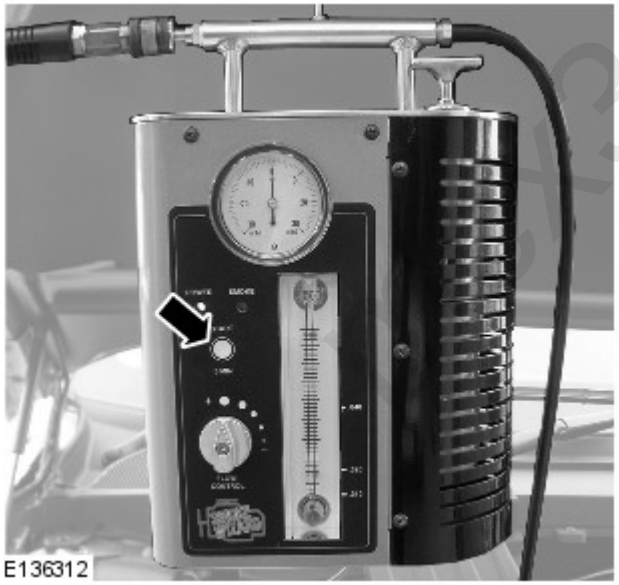

8. NOTE: The flow control valve must be in the fully open position.

• NOTE: Smoke is produced for 5 minutes. The smoke test equipment will automatically switch off after this period of time.

Switch the smoke test equipment on.

9. Remove the oil filler cap, and observe until a constant flow of smoke is visible leaving the oil filler orifice. Install the oil filler cap.

10. NOTE: The longer smoke is allowed to exit from a leak, the more fluorescent dye will be deposited at a leak location.

Using the torch supplied in the kit set to white light, look for escaping smoke. Alternatively, use the ultraviolet light to look for fluorescent dye deposits at the source of a leak.

Published: 11-Nov-2011

Engine System - General Information - Cylinder Head Gasket SelectionTDV6 3.0L Diesel

General Procedures

Special Tool(s)

	303-979 Measuring Bridge, Piston Protusion

Check

- NOTE: Some variation in the illustrations may occur, but the essential information is always correct.

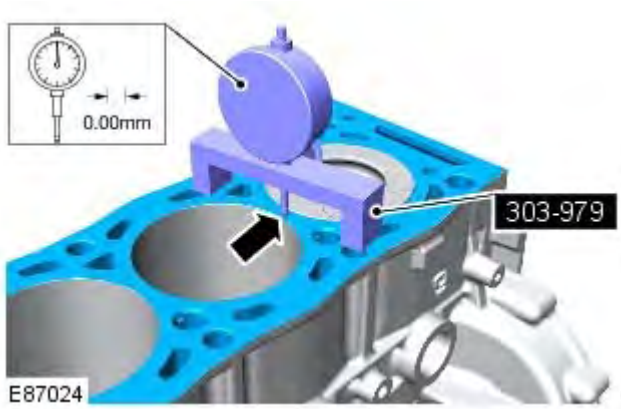

1. **1.** CAUTION: Make sure that the surface is clean and free of foreign material.

   Zero the gauge on the cylinder block machined face.

   Special Tool(s): 303-979

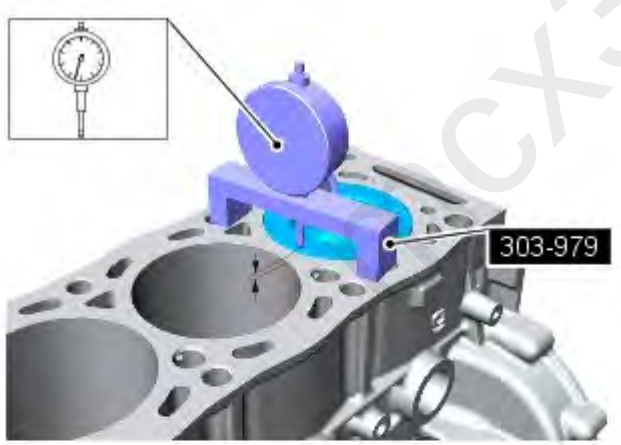

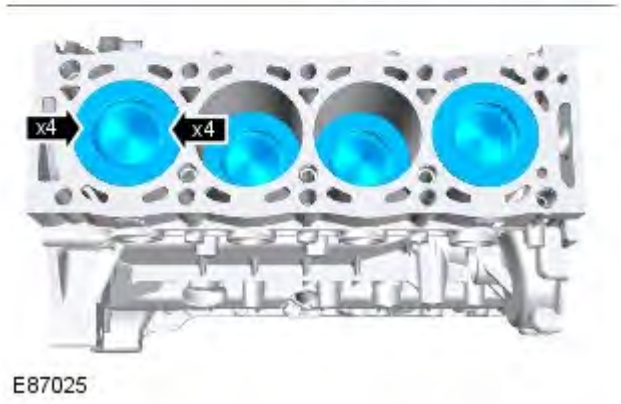

2. **2.** CAUTION: Make sure that the surface is clean and free of foreign material.

   - NOTE: Note the dial gauge readings.

   Take 2 measurements on each piston crown.

3. Use the average piston protrusion measurement (taken from all

mcx30.com

piston measurements), to select the correct thickness cylinder head gasket.

Refer to: Specifications (303-01B Engine - TDV6 3.0L Diesel, Specifications).

mcx30.com